Zürcher Hochschule
für Angewandte Wissenschaften

School of Engineering

Current Loop 4-20 mA

© Roland Küng, 2009

Simple System for Sensors and Actuators

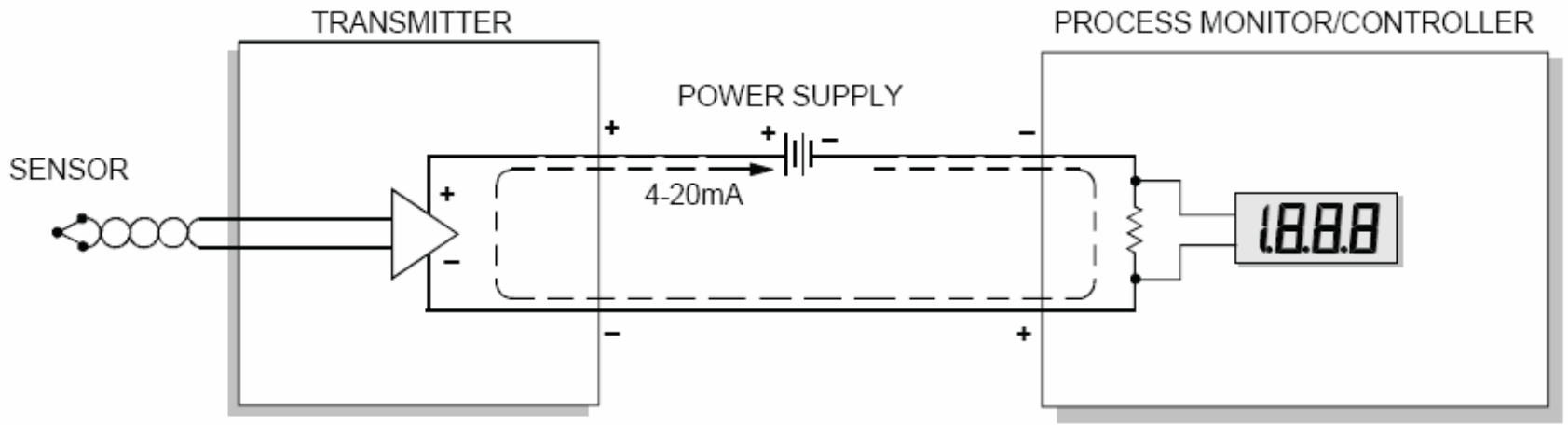

Figure 1. Typical Components Used in a Loop Powered Application

History

- Since the 1950s, current loops have been used to transmit transducer data for process monitoring and control.
- With their low implementation cost, inherent resistance to noise, and ability to carry signals long distances, current loops have proven particularly well-suited for industrial environments.

- Today competing systems are RS 485 and 422 using differential voltage signaling

Simplicity as Advantage

Kirchhoff says: Current is constant along any wired loop

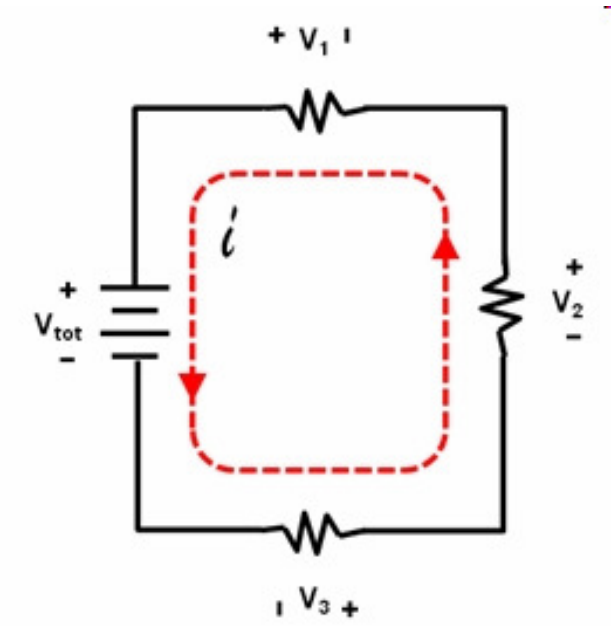

Even if there is significant electrical resistance in the line, the current loop transmitter will maintain the proper current, up to its maximum voltage capability.

Practical Realization

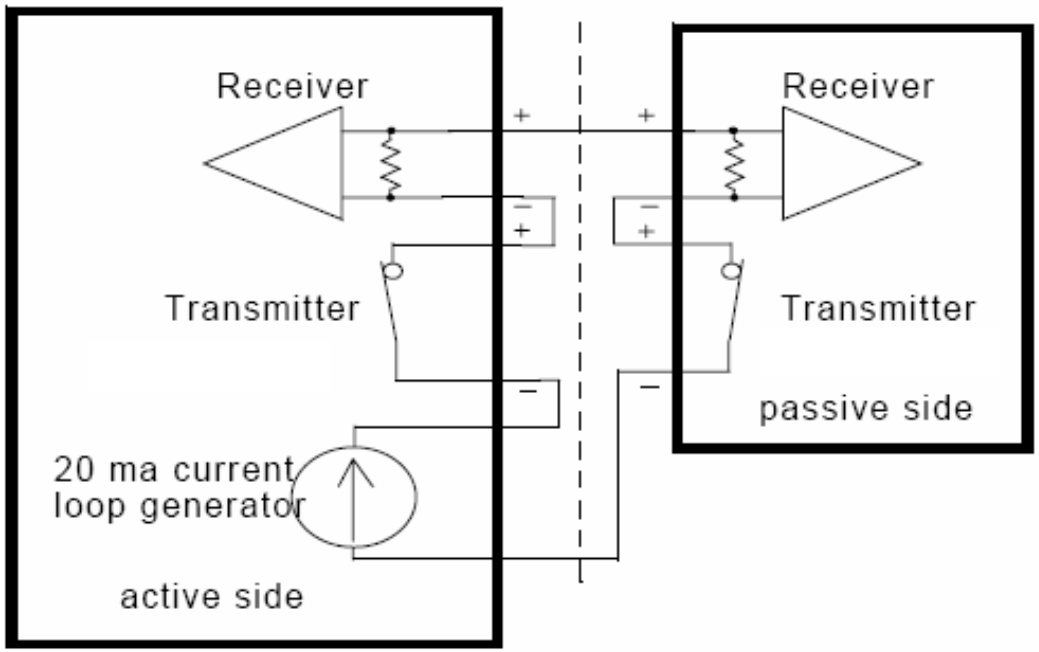

Figure 2. Simplex 20 mA Circuit

- Active side owns loop current generator
- Passive side may use own power or power from active side

Data Coding

Mark logical „1“ Space logical „0“

How Coding is realized in RS-232 and in 20-mA Current Loop

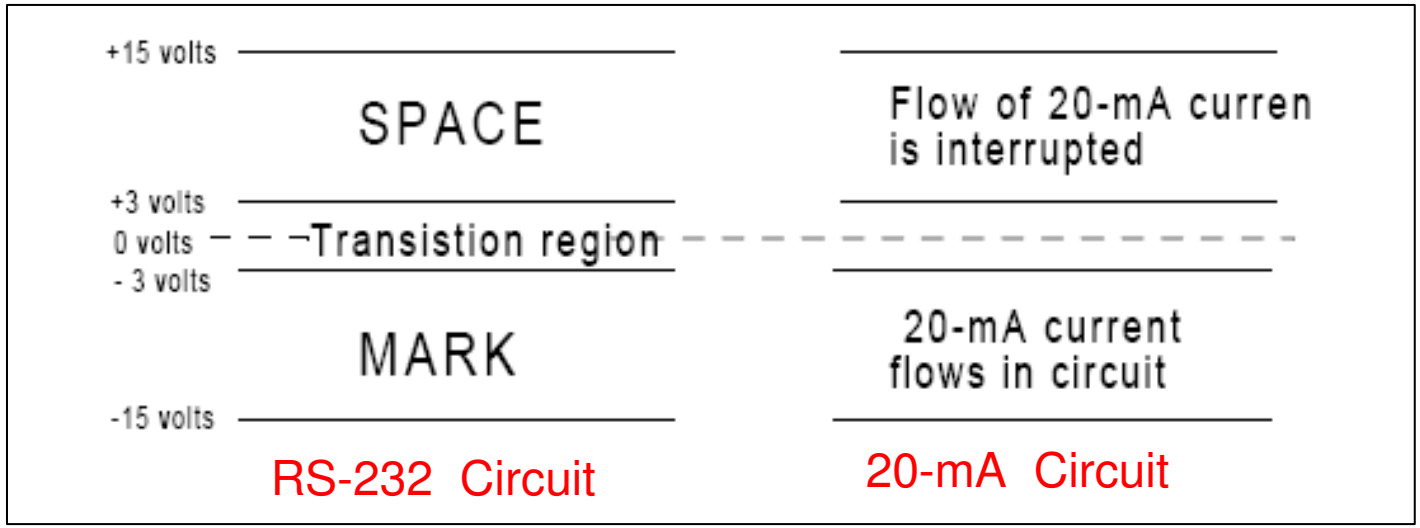

Attention to Common Mode

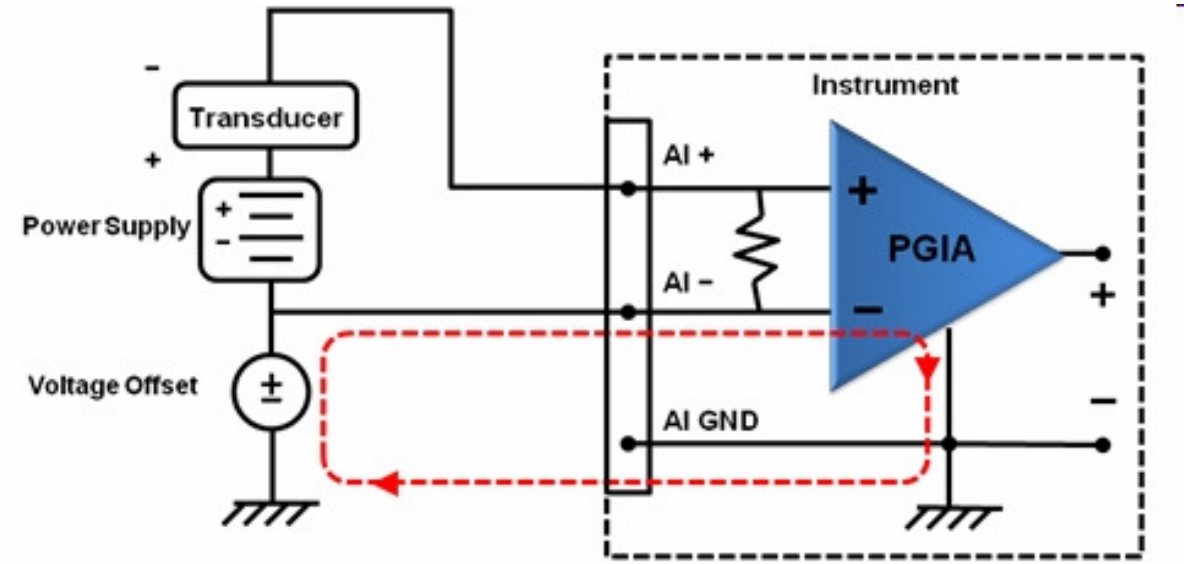

- Ground loops are created when two connected terminals in a circuit are at different ground potentials.
- This difference causes current to flow in the interconnection, which can produce offset errors.
- Isolation techniques (e.g. optical) may be used

The 4-20 mA Idea

- Only two wires are required to send the signal and also supply power to the sensor
- Signal may be analog or digital
- The *live-zero* represented by 4 mA allows the receiving instrument to detect some failures of the loop
- Also allows transmitter devices to be powered by the same current loop (called *two-wire* transmitters).
- Such instruments are used to measure pressure, temperature, flow, pH …
- A current loop can also be used to control a valve positioner or other output actuator.
- An analog current loop can be converted to a voltage input with a precision resistor.

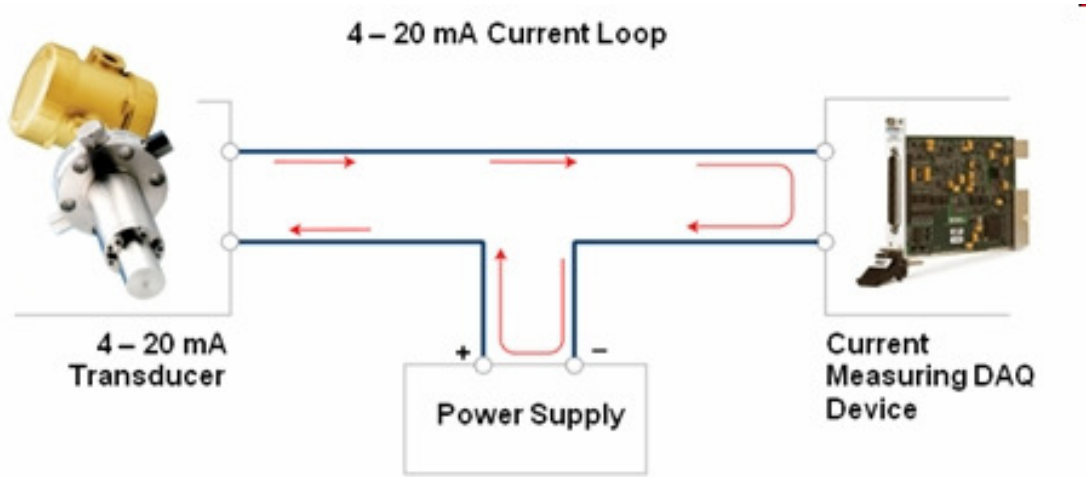

Transmit Side

200mV-1V

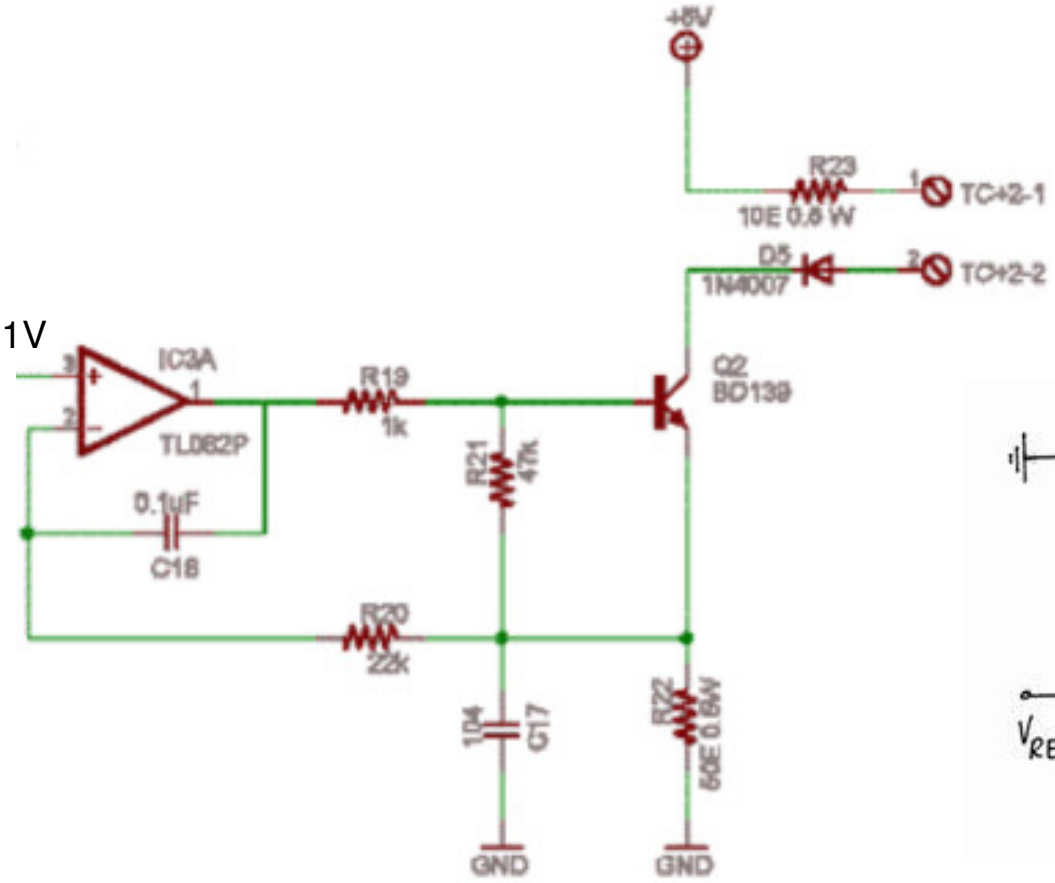

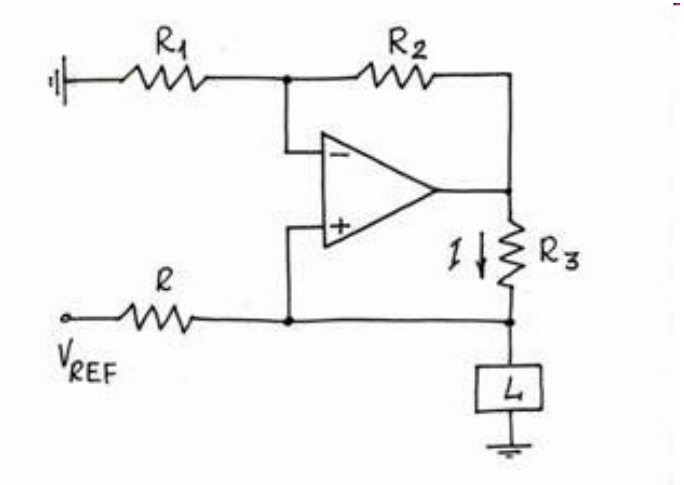

- Any precision current source circuit can be used

Receive Side

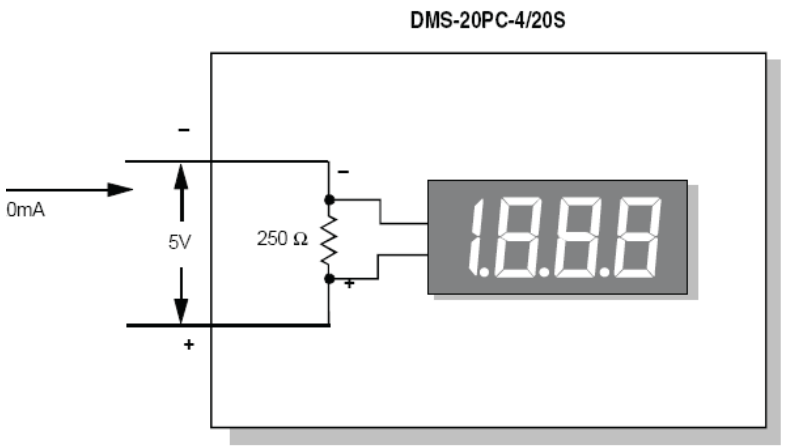

Loop Drop = 250 Ω x .020A = 5V

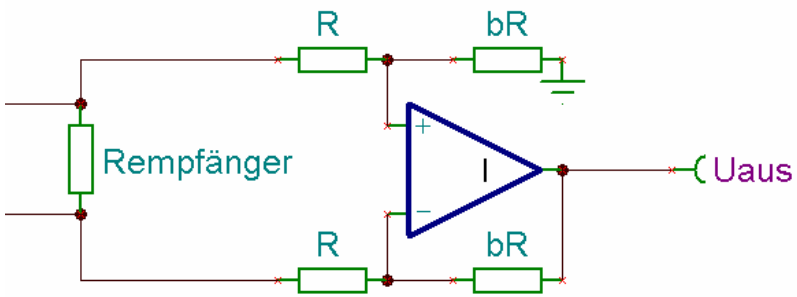

- Example of precision resistor to convert current back to specified voltage
- Differential OpAmp circuit can be used as detector
- Current loop can also transmit analog signals precisely

Driver Voltage Calculation

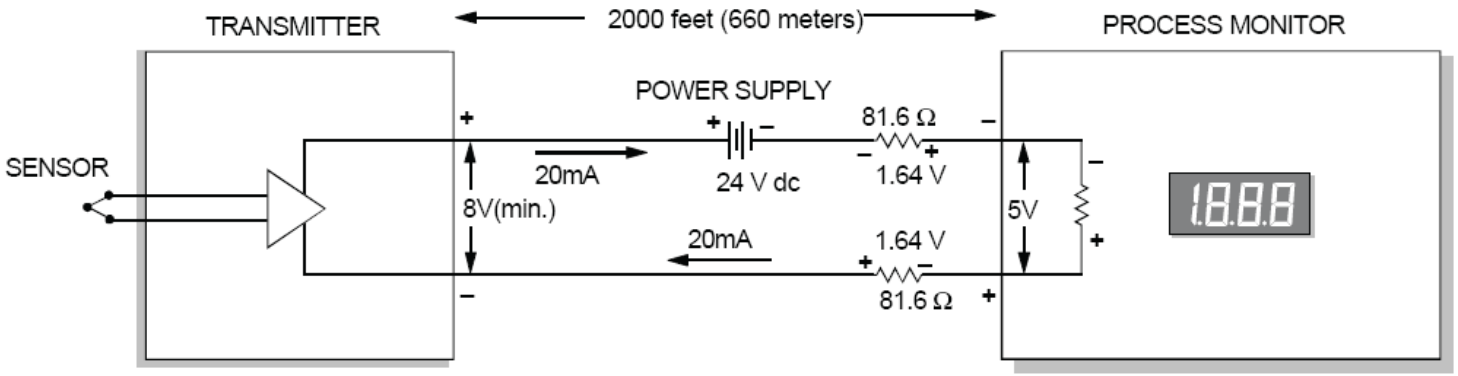

Figure 3. Wiring Resistance Effects

- However, the current must travel 2000 feet down to the process monitor and another 2000 feet back to the transmitter's "+" output terminal, for a total of 4000 feet.

- As noted above, 26-gauge wire has a resistance of 40.8 Ω per 1000 feet, yielding a total loop resistance (R) equal to 4000 feet x (40.8Ω /1000 feet) = 163 Ω.

Modified Howland Current Source

Let's check this
on the experimental board
or simulate with TINA

LM741, ± 12 V,
Vin 0…5 V
I_L 0…20 mA
Load 220 Ω
Select e.g. a = 0.2

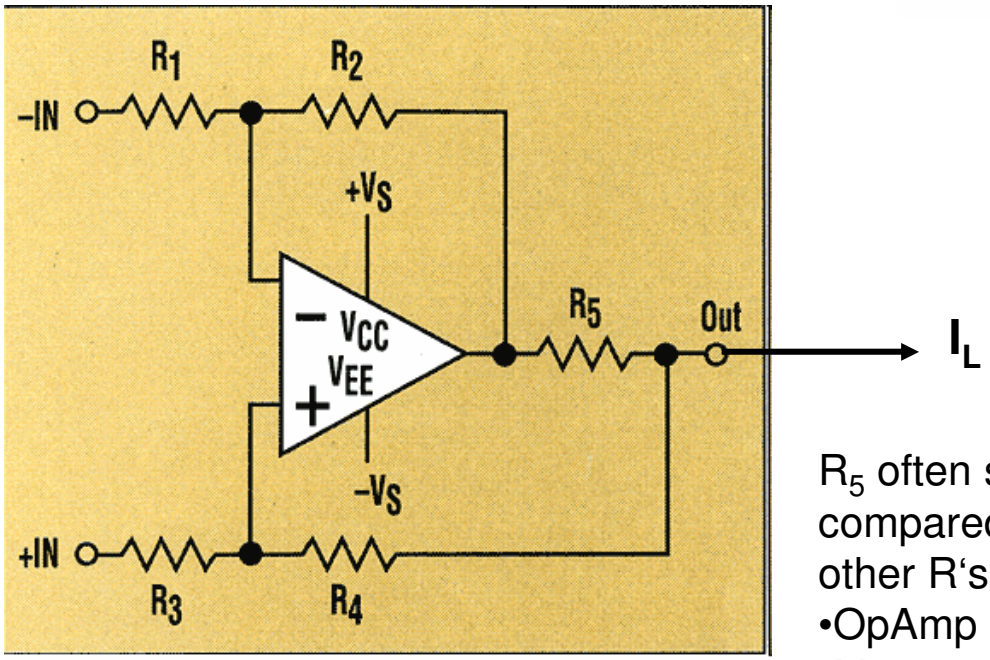

R_5 often small
compared to
other R's →
•OpAmp sources I_L
•More voltage swing

Design: Set –IN to GND
with $R_2/R_1 = a$
fulfill equation: $a \cdot R_3 = R_4 + R_5$ then

$$I_L = \frac{R_4 + R_5}{R_3 \cdot R_5} V_{+IN} = \frac{a}{R_5} V_{+IN}$$

Other Methods

Signalart	Spannung	Strom	Signal mit Wellenimpedanz
Prinzip	Spannungssignal Strom vernachlässigbar	Stromsignal Spannung vernachlässigbar	Signal = Spannung & Strom Spannung/Strom = Kabel-Wellenimpedanz
Vorteile	Sehr einfach, da wenige Bauteile Direkt vom OpAmp- oder µC-Ausgang Direkt zum OpAmp- oder µC-Eingang	Unempf. auf elektro-magn. Störungen, da niederohmig Schnell, da sich Ströme schneller schalten lassen als Spannungen Kabelbruch und Geräteausfall einfach detektierbar	Hohe Datenraten, da keine Signalreflexionen am Kabelende, weil diese mit einem Widerstand (Wert = Wellenimpedanz) abgeschlossen
Nachteile	Empf. auf elektro-magn. Störungen Kabelbruch und Geräteausfall schlecht detektierbar	Aufwendiger und teuerer, da zusätzliche Treiber- und Empfänger-Schaltung notwendig	Ungeeignet für analoge Messsignale, da Signalverluste im Kabel nicht korrigierbar

Other Methods con‘t

Signalart	Spannung	Strom	Signal mit Wellenimpedanz
Verbesserte Varianten	Abgeschirmte Leitungen mit verdrillten Adern Erdschlaufen vermeiden Differentielle Aus- und Eingänge gegen Störungen	Differentielle Aus- und Eingänge gegen Störungen und für höhere Datenraten	Differentielle Aus- und Eingänge gegen Störungen und für höhere Datenraten
Standards für analoge Signale Sensoren und Aktoren	**0-10V**, >1kΩ: HLK, Haustechnik	**0-20mA**, 10..100Ω: Industrie **4-20mA**: Industrie: Ausfall-erkennung und Speisung über das selbe Kabel	
Standards für digitale Signale Computer-Netz-werke und Schnitt-stellen	**RS232**: serielle PC-Schnittstelle: ca. ±9V	**Ethernet** (alte Variante mit Koax-Kabel): CSMA/CD-Verfahren (Carrier Sense Multiple Access with Collision Detection): 90mA, 50Ω-Abschluss	**Ethernet**: (mit Twisted-Pair) Computer-Netzwerk: ±1V, 100Ω **USB**: Punkt-zu-Punkt: 0.4mV, 90Ω **Firewire**: Punkt-zu-Punkt: ±0.3V, 110Ω **CAN**: Automobil-Bussystem: CSMA/CA-Verfahren (Carrier Sense Multiple Access with Collision Avoidance): 110Ω